PRO DUCT :
Thankstothe adjustable colour selection, the Lumistar RGBw luminaire offers flexible
Light customisation that allows processes in the container to be observed particularly well - ideal for sensitive applications in the chemical, pharmaceutical or food industries. Targeted use of light helps to visualise the full potential of the product - whether for process control or impressive presentation.

INTELLIGENT LIGHTING
T E CHNO LO G Y:
RGBw stands for red(R), green (G), blue (B) and white (w). These four colours form the basis from which all other colours can be created through additive colour mixing.

I NSERT :
Universal sight glass light made of stainless steel. Particularly suitable for illuminating flow sight glasses, pipework, laboratory mixers, bioreactors and the inside of boilers, tanks, agitators and other generally closed containers.

Suitable for round sight glass fittings to DIN 28120/DIN 28121 or similar as well as for screw-type sight glass fittings similar to DIN 11851

The Lumistar ESL 55RGBw luminaire fits from the following nominal widths:

a) Round sight glass fittings to DIN 28120 or DIN 28121 or similar: DN40
b) Screw-in sight glass fittings similar to DIN 11851:
   - From DN 50, fastening is via a separate flare
   - From DN 80, fastening is via a hinged bracket

SPECIAL ADVANTAGES:
- Vibration resistant
- Long service life and operational r elia bilit y
- Ideal for fittings that are difficult to access



- No heat radiation in the light emission (cold light)
- No additional unwanted heat during chemical and/or biological processes
- Easy electrical connection thanks to integrated connection cable or cable gland
- is ideally suited for both the combination of sight and light glass (1-flange version) and for their separate arrangement (2-flange version).

TECHNICAL DATA:

Eneegy supply	electnic	
	Voltage tvoe	PoE / altenatively AC/DC
	Mahs voltage	For AC/DD / 24 V
Operatingrnmode	Conainous operation	
Power consumotion		Max 7 W
Mass	Weight without packaging	3.3 kg
	Weight with packaging	3.3 kg
Ambient cemperatiure		20°C to +50°C
IP code		IP56 IP57 according to EN 60529

DIMENSIONS AND MATERIALS:

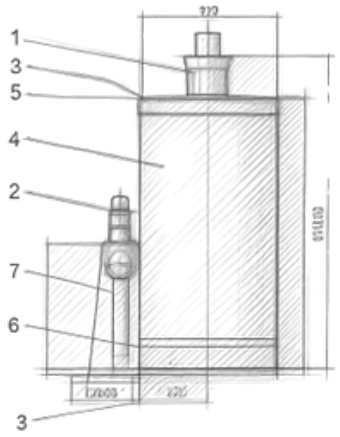

1. Cable gland M20x1 5
2. External protective conductor terminal
4 Screw plugs M4 A2-70
4 Luminaie mousing
5 Connection Cv rror
8. Luminaie thousiass
7. (hiiocn proiohoit) (Ic&ogiig) / +

https://gallet-fr.com/

Gallet Équipements Industriels Zone industrielle 12 rue Saint Éloi - 57320 Bouzonville
Téléphone : 03-87-78-33-83 • Courriel : gallet@gallet-fr.com

SHAFT LENGTH:

White:

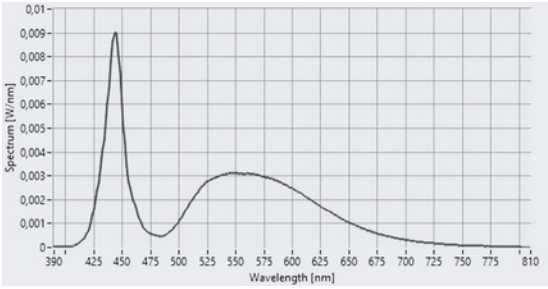

Red:

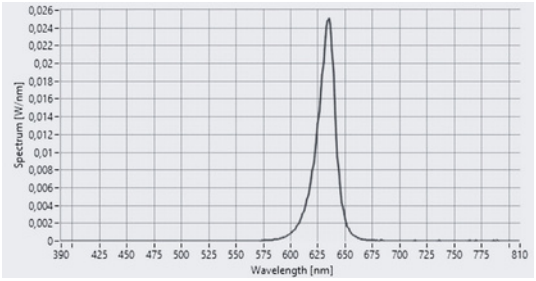

Gr een:

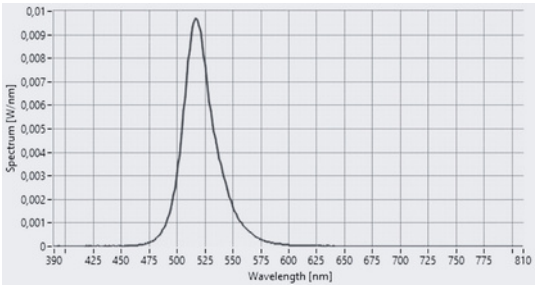

Blue:

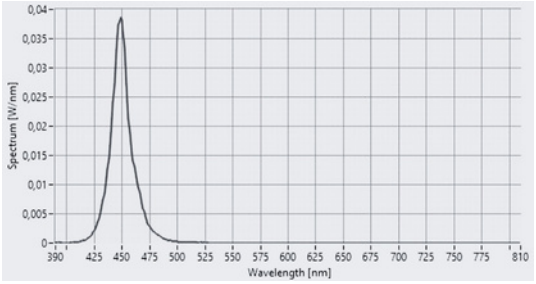

Yellow:

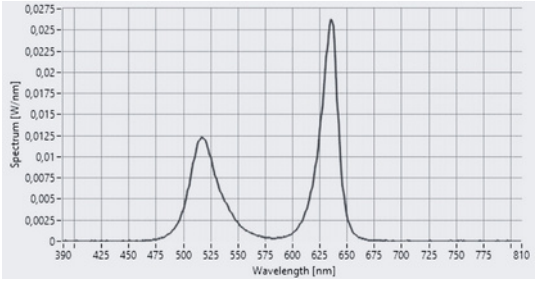

ESL 55RGBw Variant	Part number	Connection	Beam angle
(PoE) 7 W	LS#3542.051.00	Network cable Cat7	29°
(24V) 7 W	LS#3542.052.00	Connection cable 3 x 1.5mm²	29°

ADDITIONAL EQUIPMENT:

Object	Part number
Luminaire mounting hinged bracket	LS#0354.025.00
Luminaire mounting flange adapter	on request
Connection cable 24V variant	Z3457.530.00
Connection cable PoE variant	L#3461.002.00
Ethernet connector RJ45	L#7320.002.00

ORDER SPECIFICATIONS:

e.g. Lumistar luminaire ESL 55RGBw (24 V) 7 W, part. no. LS#3542.052.00

Would you like additional information about our versatile Ex and non-Ex lights, our sight glass fittings to DIN 28120 / 28121 or similar to DIN 11851, flow-through sight glasses, hinged sight glasses with or without lighting, rectangular or longitudinal sight glasses, windscreen wipers for centric or lateral installation, spraying devices, Ex and non-Ex camera systems?

If so, our sales team will be happy to help you.

• DIP switch
Lumistar Luminaire ESL 55RGBw Dip offers simple and reliable adjustment of the light colour without a network connection. The RGB values can be set in the range from 0 to 255 using the dip switches. Example:
· red: 255, 0, 0
· green: 0, 255, 0
· blue: 0, 0, 255
· white: 255, 255, 255
Max. Power consumption: 7 watts on the controlled device

Voltage: 24 V